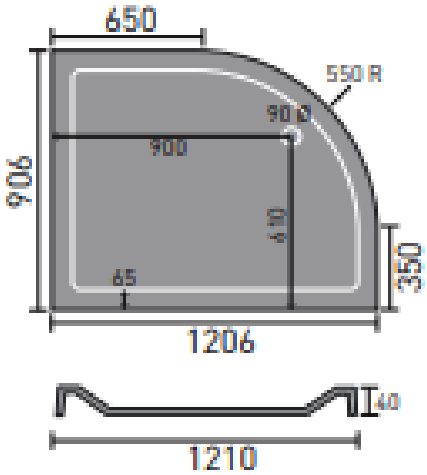

1200 x 900mm quad
LH shown